KESSLER

# Milling spindles / V *line*

## Allround talent for machining technology



SPINDLE TECHNOLOGY I SYSTEM TECHNOLOGY I DRIVE TECHNOLOGY I SERVICE SOLUTIONS

www.kessler-group.biz

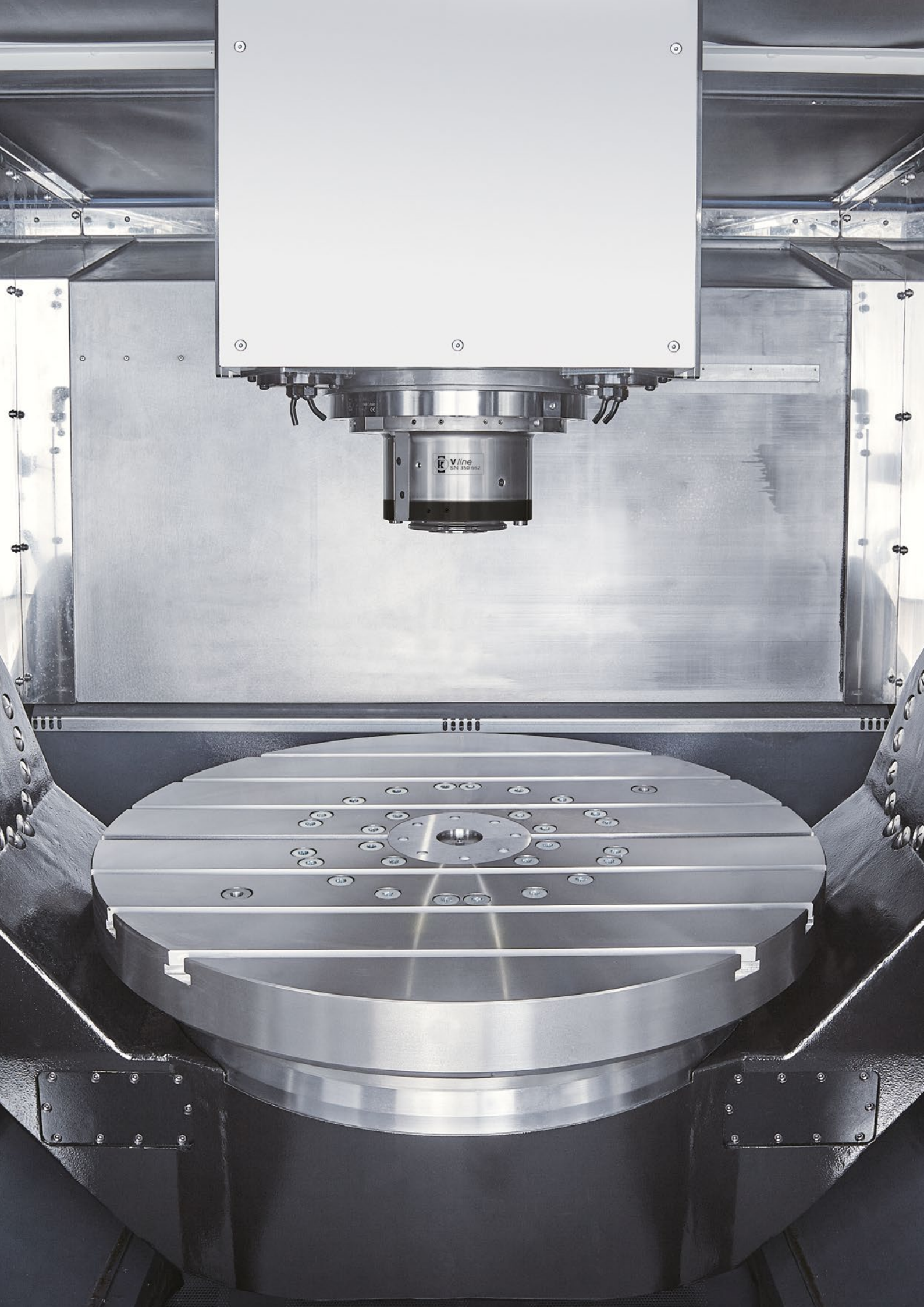
V line
SN 350.662

# KESSLER spindle *lines*

## Spindle technology with passion and expertise

**The KESSLER milling spindles have a modular design.**

Configure your own milling spindle model by specifying the installation position, motor, speed, bearing, lubrication and sensor system – the perfect customized solution for your individual branch and application needs.

**KESSLER offers more:** As an internationally successful company with extensive and highly specialized expertise, we provide comprehensive advice about the design and manufacture of individual components and project management of complex system solutions. We use the very latest technology and analytical processes to test our components under realistic conditions, so that our products help your business to stay flexible and maintain its competitive edge.

Our in-house development division is supported by extensive calculation and analysis skills and covers everything from direct drive technology to the construction of all-in-one systems. Furthermore, optimized production and assembly lines provide the framework for stable processes and the superior quality of our products.

## End-to-end precision from the components to the on-site service

**Founded in 1923 by Franz Kessler, the company has developed to become the leading supplier of motor spindles as well as directly driven 2-axis heads and rotary tilt tables for the machine tool industry.** KESSLER is proud to list many major companies from the mechanical engineering sector amongst its long-standing customers.

With the expertise of more than 95 years, KESSLER is continuously developing and optimising its products. The KESSLER product range serves a wide range of sectors, processes and applications. Close cooperation with our customers remains our key focus. The extensive product range, from hightech spindles, 2-axis heads, rotary and rotary tilt tables to motors and direct drive systems, enables KESSLER to implement customised solutions with speed and flexibility.

Service is a matter of trust. Rely on us as your trusted service partner: KESSLER has an established global network of technology and service centres.

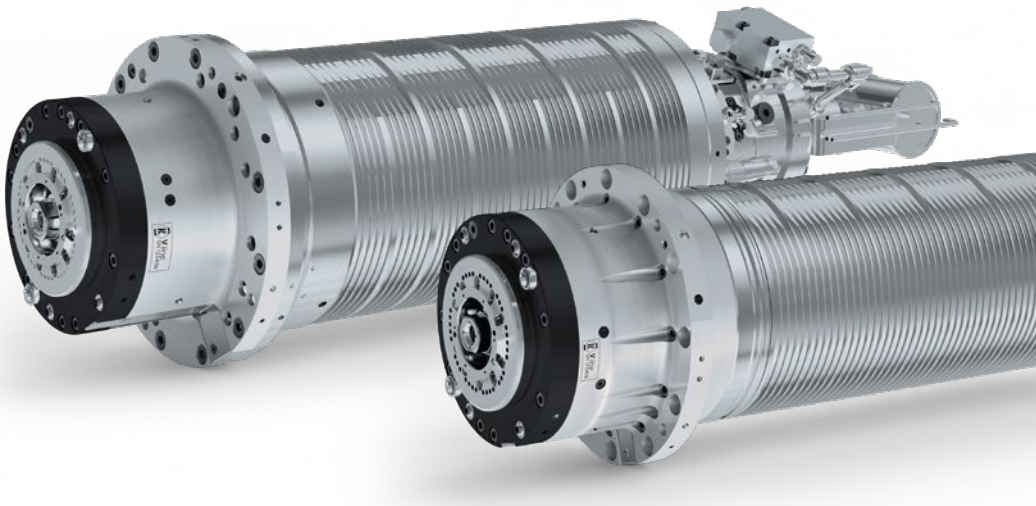

# Masterpieces

**KESSLER provides tailor-made spindle technology to suit your needs: Individual, flexible, modular and suitable for all areas of application**

| | | | | | | | | | | |
|---|---|---|---|---|---|---|---|---|---|---|
| **HC *line*** ○ Heavy cutting ○ Aerospace titanium machining ○ Machining of large-scale parts | | | | | | | | | HC500 | HC600 |
| **PC *line*** ○ High speed ○ High power ○ High accuracy | | | PC80 | | PC100 | | | PC400 | | |
| **H *line*** ○ Horizontal installation ○ Very short acceleration and braking times | | H80 | | H100 | | H200 | | | | |
| **MT *line*** ○ Very short construction ○ Used in tilting heads, turning and milling operations | | MT80 | | | MT100 | | | MT400 | MT500 | MT600 |
| **V *line*** ○ **Vertical installation** ○ **Tilting** ○ **Allrounder** | V60 | | V80 | | V100 | | V200 | V400 | | |
| Spindle fitting Ø (mm) | | | | | | | | | | |
| ○ Open cooling housing | 140 | | 170 | | 200 | | 230 | 270 | 325 | 395 |
| ○ Closed with steel sleeve | 150 | | 180 | | 210 | | 240 | | | |
| ○ Closed with solid housing | | 170 | | 200 | 230 | 240 | | 310 | | |

Availability on request

## The V *line* is all about:

- **Vertical machining**
- Suitable for **tilting operation**
- **Processing of different materials**
- Machining of **workpieces with varying geometries**
- Use in **small and large-scale production**
- **Short duration** until **reaching the stable Tool Centre Point (TCP)**
- As an option, can be supplied with **clamps for turning operations**
- Option to **measure the axial shaft displacement**

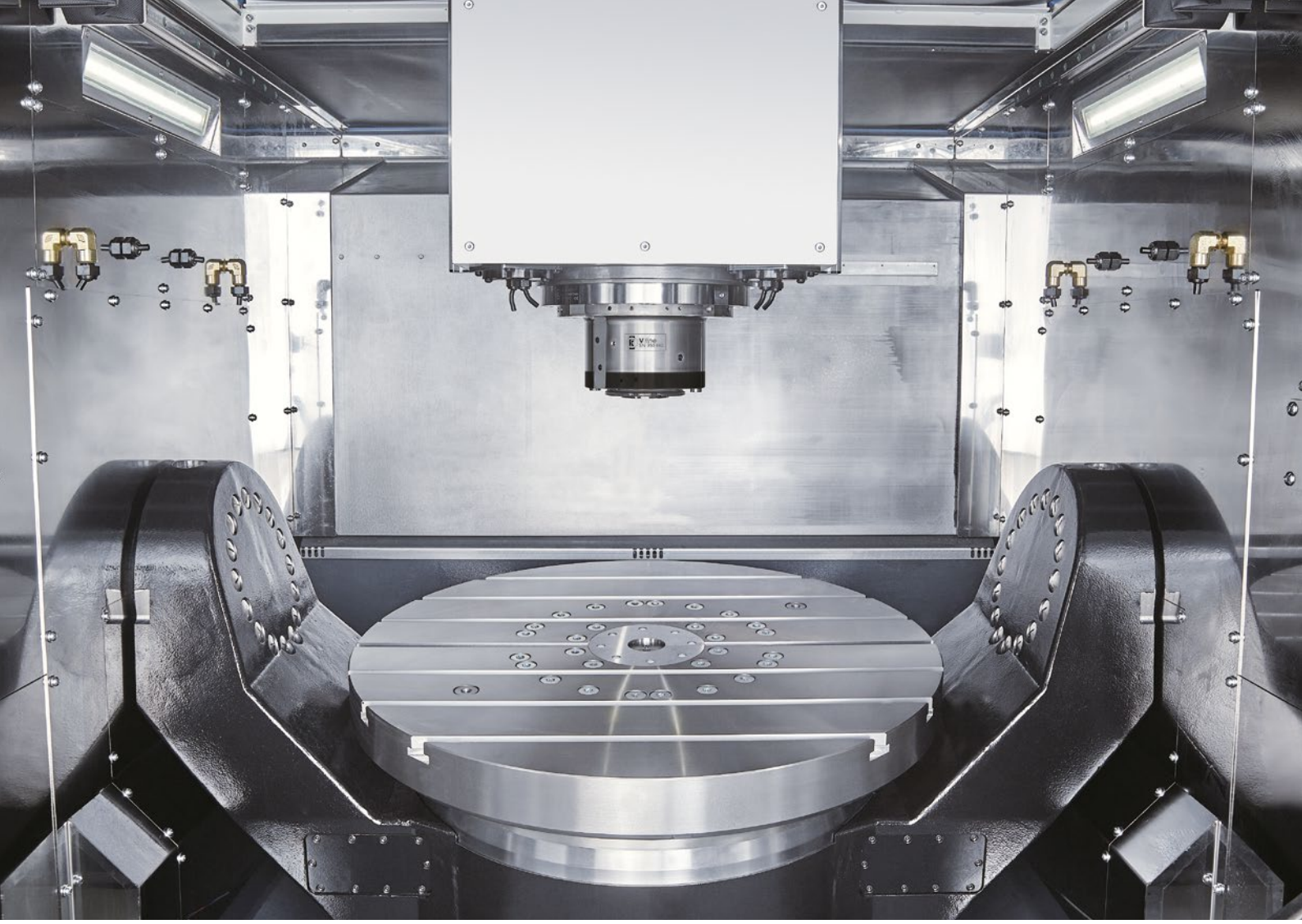

# Our V *line* variants

| Model | V80 | V100 | V200 | V400 |
|---|---|---|---|---|
| Maximum speed (rpm) | 25,000 | 24,000 | 18,000 | 15,000 |
| Spindle fitting Ø (mm) | 170 | 202 | 230 | 270 |
| Tool interface | HSK 63<br>BBT 40 / SK 40<br>Capto C6 | HSK 63<br>BBT 40 / SK 40<br>Capto C6 | HSK 100<br>SK 50 / BBT 50<br>Capto C8 | HSK 100<br>SK 50 / BBT 50<br>Capto C8 |

## Impress with:

- **high flexibility**
- **optional shaft clamping**
- **tilting operation optional**

# All advantages of the modular system at a glance

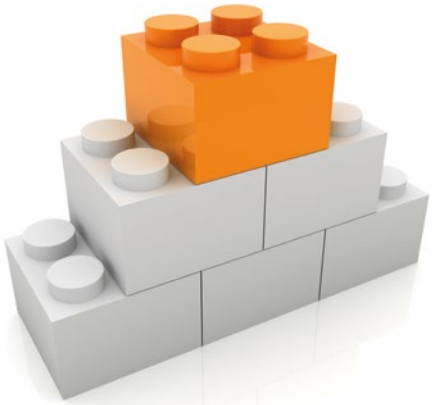

- **Robust**
  Designed for high load forces in the machining process
- **Bearing preload**
  dynamically adaptable to the machining process
- **High degree of operational safety thanks to LEDs**
  due to optimal illumination of the tool intervention
- **High flexibility**
  Various tool interfaces available
- **High availability**
  with the KESSLER tool clamping system
- **Reduction of TCO**
  **(Total Costs of Ownership)**
  due to the rapid change of the rotor exchange group (KESSLER QCC)

COOL***MOTION***®

- **The most suitable** COOL***MOTION***® **motor** for your individual needs: with very high torque, very high speed or high-compact design
- **Various bearing lubrication systems available**
- **Hydraulic, pneumatic or electrical release unit available**
- **High flexibility:** KESSLER rotary union for media: lubrication, dry operation, compressed air, MQL capability
- **Process reliability** due to extensive sensory system
- **Analog or digital tool clamping status monitoring available** on request
- **Hydraulic clamping for turning operations available**
- **High power density,** due to very compact, spacesaving design and light weight

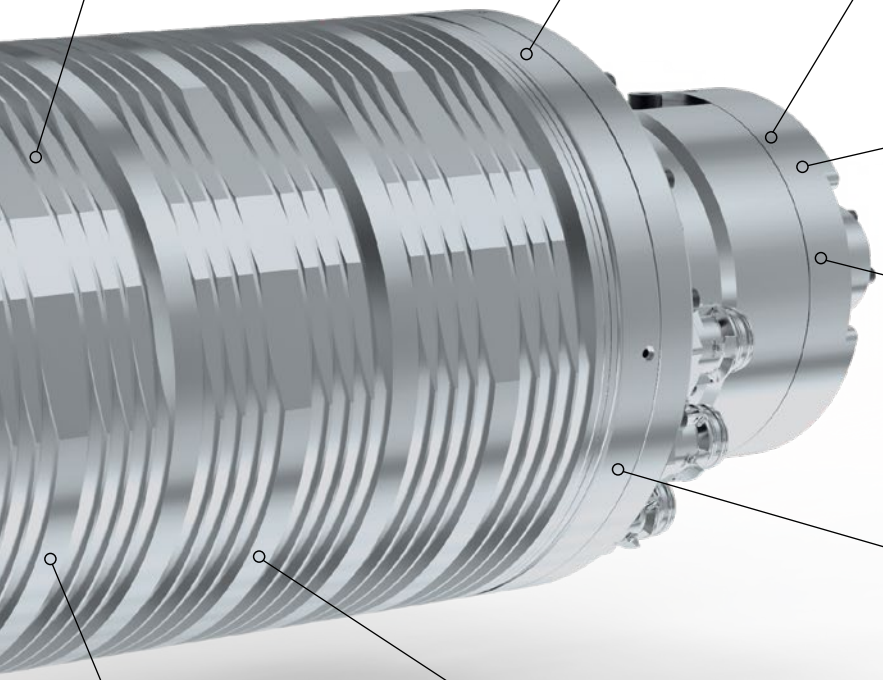

HIGH QUALITY

MADE IN GERMANY

# Milling spindle / V80

- **Spindle fitting:** Ø 170 mm
- **KESSLER** COOL***MOTION***® motor**
- **Rotary union:** Internal coolant supply with high volume flow
- **Cooling:** Open cooling housing
- **Bearing lubrication:** Grease / re-greasing / oil-air



COOL***MOTION***®

Choose the most suitable COOL***MOTION***® motor from the list of preferred motors

| Model | | S1 | | S6 / 40 % | | S6 / 25 % | | S6 max. | | |
|---|---|---|---|---|---|---|---|---|---|---|
| | Max. speed (rpm) | Torque (Nm) | Power (kW) | Torque (Nm) | Power (kW) | Torque (Nm) | Power (kW) | Torque (Nm) | Power (kW) | |
| V80-A26 | 25,000 | 65 | 28 | 90 | 39 | 110 | 47 | 135 | 58 | High speed* |
| V80-A20 | 20,000 | 65 | 19 | 95 | 28 | 120 | 35 | 150 | 44 | High torque |
| V80-A24 | 24,000 | 50 | 19 | 70 | 27 | 85 | 33 | 110 | 43 | Entry level* |

*Availability on request

# Milling spindle / V100

- **Spindle fitting:** Ø 202 mm
- **KESSLER** COOL***MOTION***® motor**
- **Rotary union:** Internal coolant supply with high volume flow
- **Cooling:** Open cooling housing
- **Bearing lubrication:** Grease / re-greasing / oil-air



COOL***MOTION***®

Choose the most suitable COOL***MOTION***® motor from the list of preferred motors

| Model | | S1 | | S6 / 40 % | | S6 / 25 % | | S6 max. | | |
|---|---|---|---|---|---|---|---|---|---|---|
| | Max. speed (rpm) | Torque (Nm) | Power (kW) | Torque (Nm) | Power (kW) | Torque (Nm) | Power (kW) | Torque (Nm) | Power (kW) | |
| V100-A25 | 24,000 | 70 | 22 | 110 | 35 | 130 | 41 | 190 | 60 | High speed* |
| V100-A15 | 15,000 | 130 | 30 | 201* | 46 | 217 | 50 | 217 | 67 | High torque |
| V100-A20 | 20,000 | 87 | 25 | 135* | 40 | 150 | 44 | 203 | 60 | Bestseller |
| V100-A14 | 14,000 | 80 | 15 | 112 | 21 | 129 | 24.5 | 141 | 27 | Entry level |

*S6 40 % / 25 % DC: 2 min.
Availability on request

# Milling spindle / V200

- **Spindle fitting:** Ø 230 mm
- **KESSLER** COOL***MOTION***® motor**
- **Rotary union:** Internal coolant supply with high volume flow
- **Cooling:** Open cooling housing
- **Bearing lubrication:** Grease / re-greasing / oil-air

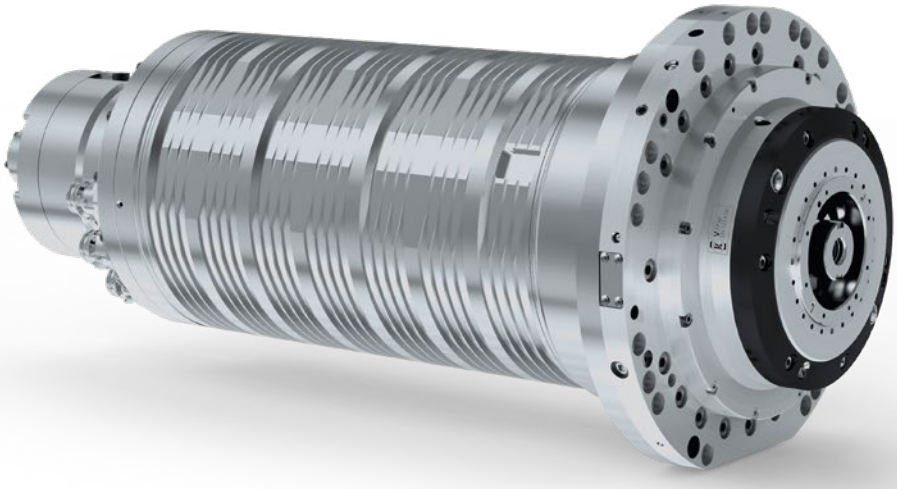

COOL***MOTION***®

Choose the most suitable COOL***MOTION***® motor from the list of preferred motors

| Model | | S1 | | S6 / 40 % | | S6 / 25 % | | S6 max. | | |
|---|---|---|---|---|---|---|---|---|---|---|
| | Max. speed (rpm) | Torque (Nm) | Power (kW) | Torque (Nm) | Power (kW) | Torque (Nm) | Power (kW) | Torque (Nm) | Power (kW) | |
| V200-S18 | 18,000 | 185 | 57 | 205 | 57 | 235 | 57 | 260 | 57 | High speed* |
| V200-S12 | 12,000 | 235 | 54 | 265 | 54 | 305 | 54 | 335 | 54 | High torque |
| V200-S15 | 15,000 | 185 | 57 | 205 | 57 | 235 | 57 | 260 | 57 | Entry level |

*Availability on request

# Milling spindle / V400

- **Spindle fitting:** Ø 270 mm
- **KESSLER** COOL***MOTION***® motor**
- **Rotary union:** Internal coolant supply with high volume flow
- **Cooling:** Open cooling housing
- **Bearing lubrication:** Grease / re-greasing / oil-air

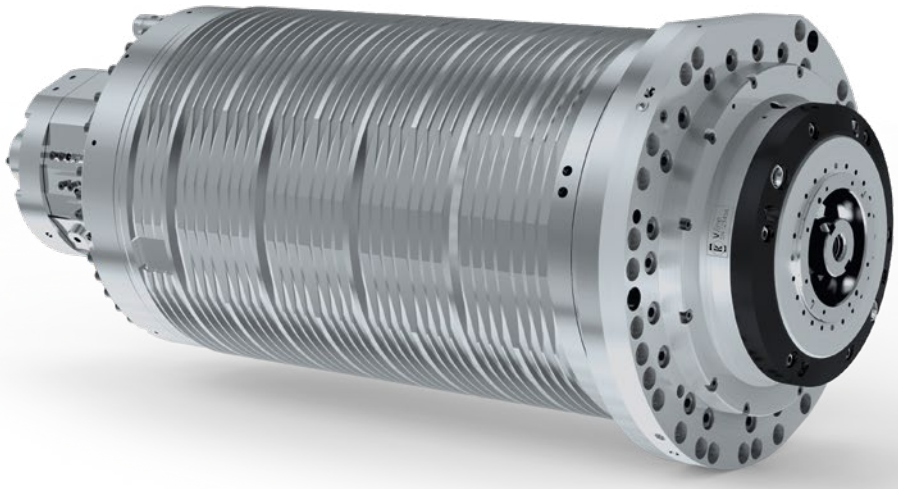

COOL***MOTION***®

Choose the most suitable COOL***MOTION***® motor from the list of preferred motors

| Model | | S1 | | S6 / 40 % | | S6 / 25 % | | S6 max. | | |
|---|---|---|---|---|---|---|---|---|---|---|
| | Max. speed (rpm) | Torque (Nm) | Power (kW) | Torque (Nm) | Power (kW) | Torque (Nm) | Power (kW) | Torque (Nm) | Power (kW) | |
| V400-A15 | 15,000 | 300 | 48 | 445 | 70 | 535 | 84 | 640 | 100 | High speed |
| V400-A10 | 10,000 | 365 | 46 | 510 | 64 | 630 | 80 | 750 | 95 | High torque |
| V400-A15 | 15,000 | 220 | 35 | 305 | 48 | 350 | 56 | 405 | 65 | Entry level |

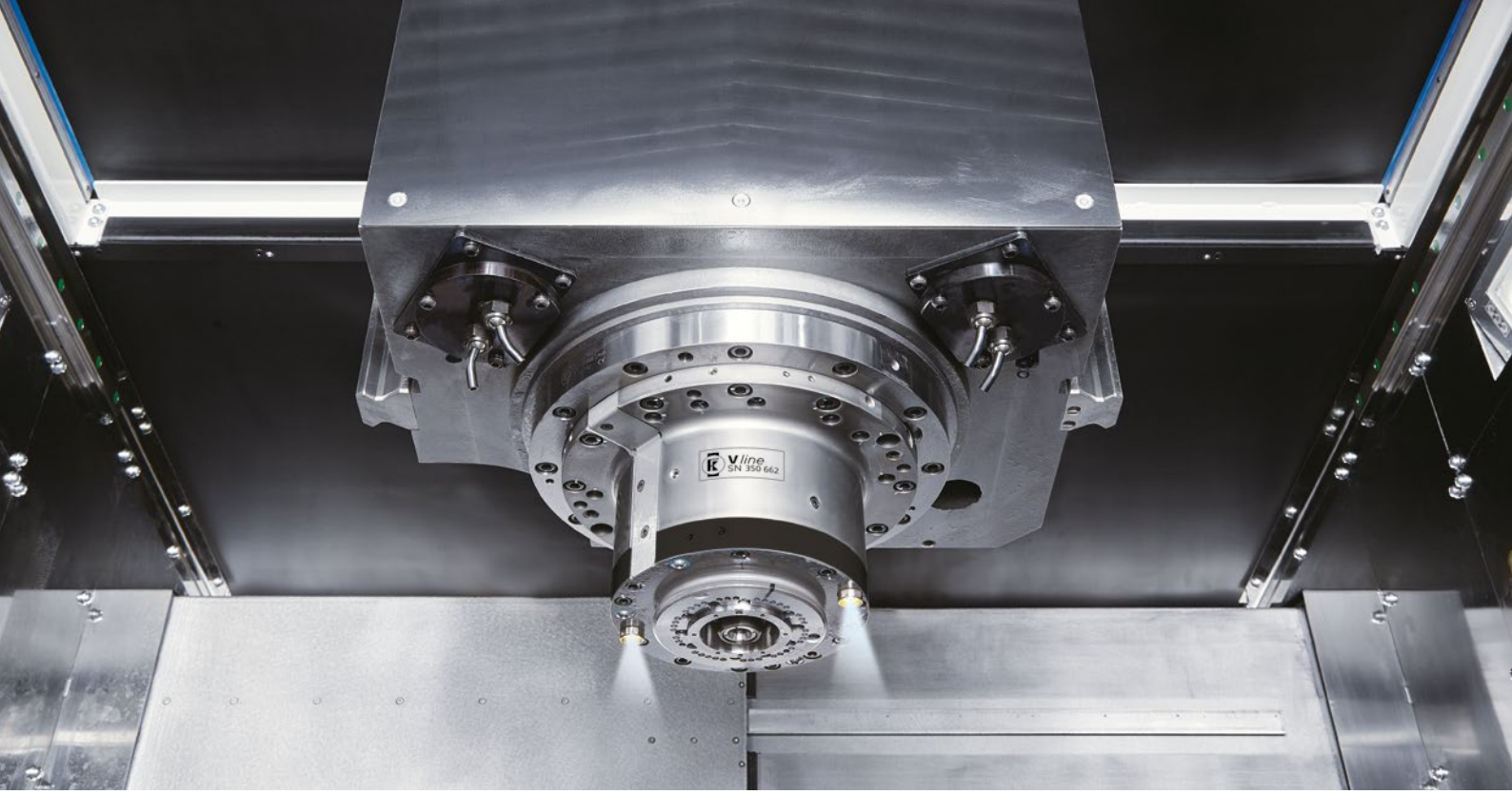


## Modular extensions available

+ **Choose the most suitable KESSLER COOL*MOTION*® motor for your needs**
+ **KESSLER rotary union**
  - Coolant
  - Dry operation
  - Compressed air
  - MQL capability
+ **Sensor monitoring system**
  - Interface control (IFC)
  - Vibration sensor
  - Analog sensor
  - Eddy current sensor detects axial shaft displacement
  - Clamping status monitoring
  - Clamping monitoring
  - Leakage monitoring
  - Temperature sensor PT100
+ **Hydraulic clamping**
+ **Bearing preload variable**
+ **Bearing lubrication Grease / re-greasing / oil-air**
+ **Closed cooling jacket**
+ **Clamping spring package is designed for 5 million tool changes**
+ **Standard cable outlet, connector optional**
+ **Holding-function for collet chuck variable**
+ **2-channel rotary union**

## Accessories

+ **Oil-air lubrication unit**
+ **Re-greasing unit**
+ **Direct lubrication on demand**

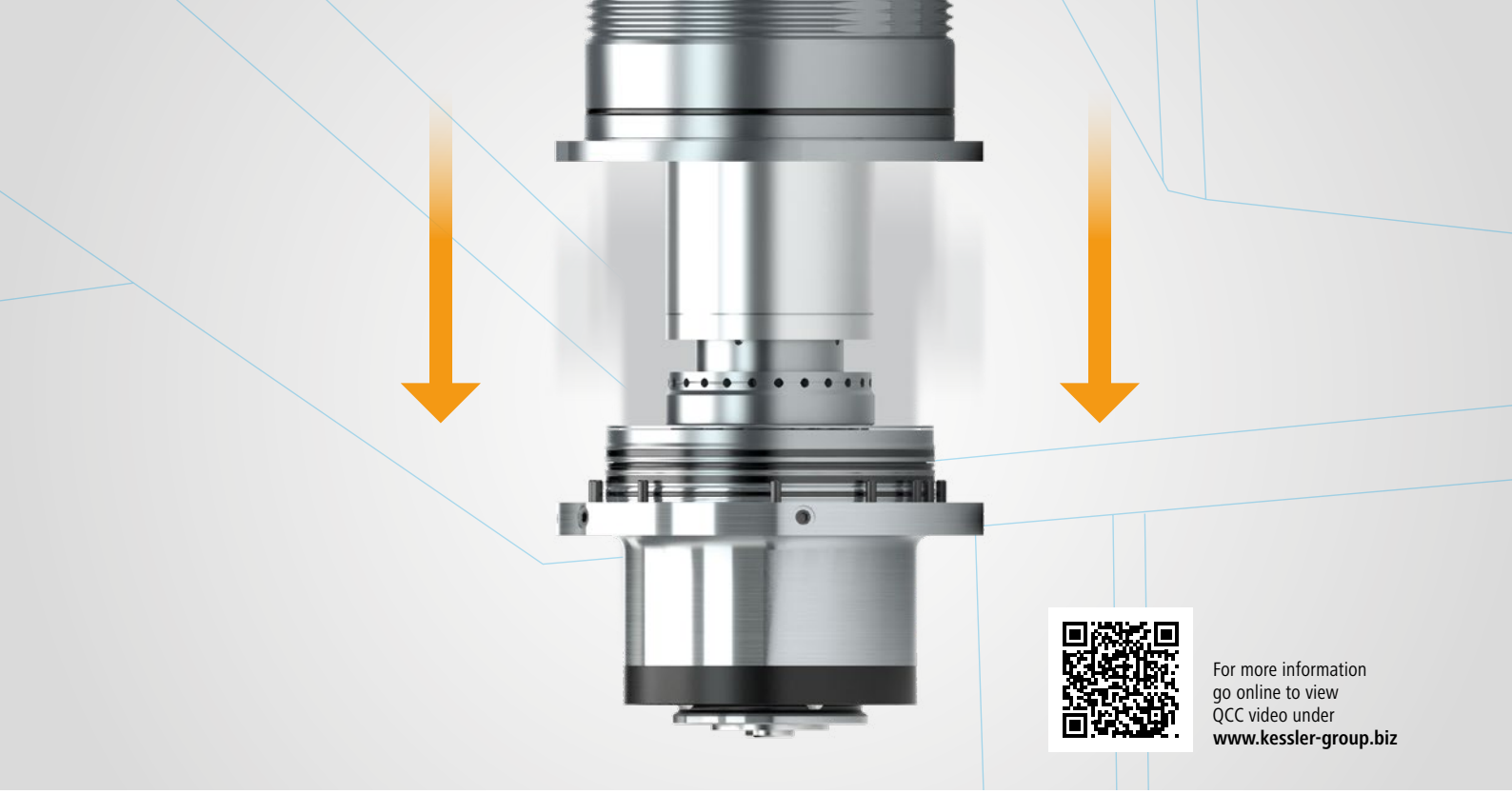

For more information
go online to view
QCC video under
**www.kessler-group.biz**

The spindle housing rests during the change in the headstock of the machine

# Quick Connect Cartridge (QCC)



1. DISASSEMBLY OF THE CARTRIDGE FROM THE MOTOR SPINDLE
2. ASSEMBLY OF THE NEW CARTRIDGE
3. RESTARTING OF OPERATION

Fast replacement of rotor shaft, front / rear bearing and power drawbar on-site

Reduces TCO (Total Costs of Ownership)

Reduces machine downtime

No electrician needed

# Keeping up with the beat of the spindle

**The KESSLER diaLOG intelligent system for data processing and condition monitoring is our solution for a connected industry**

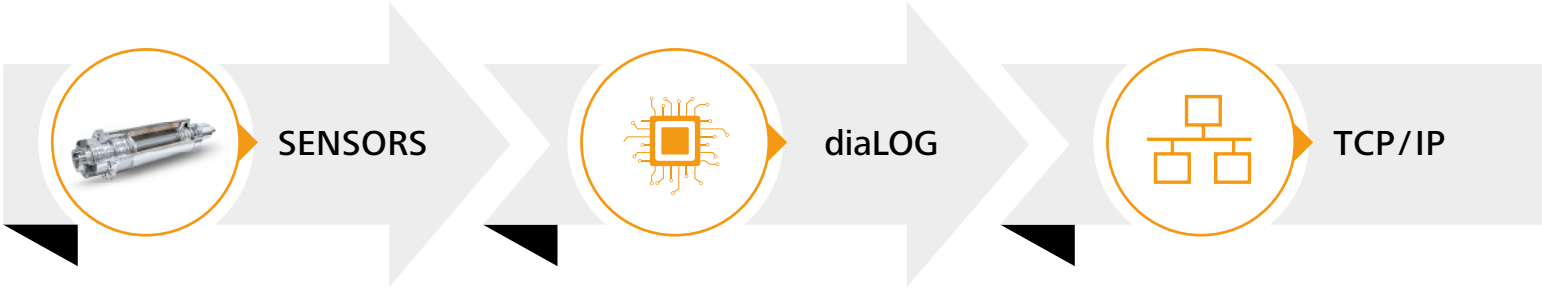


- Integrated electrical current, temperature and vibration sensors determine the current, frequency, temperature conditions and vibration acceleration.

- An intelligent digital network system (KESSLER diaLOG) analyses and evaluates process data.
- Detects and stores limit value exceedances
- Interface with the network infrastructure

- The system is equipped with a TCP/IP interface for data transfer. This system transmits diaLOG data either continuously or on request to the diaLOG App or client application.

## KESSLER diaLOG
## All advantages at a glance

- Condition monitoring by detecting limit value exceedances

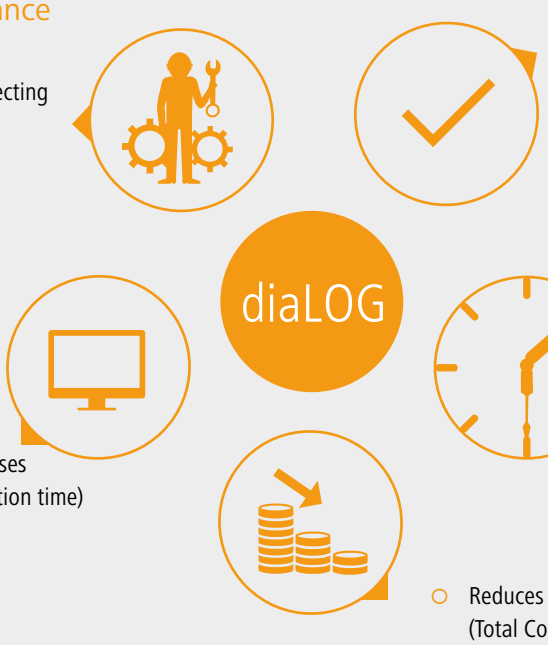


- Reduces unscheduled downtimes
- Reduces machine downtime
- Improved operational reliability in customer processes (Process performance, operation time)
- Reduces TCO (Total Costs of Ownership)

## ANALYSES

- Predefined limit values are continuously monitored and logged by the system. The diaLOG App has been developed for evaluating the diaLOG data.
- Its functions are planned to include preventive maintenance and continuous data collection.
- In future, correction factors from the motor spindle will be communicated to the user and warning messages are automatically transmitted to the process control system.
- KESSLER diaLOG incorporated in the product contributes to full process visualisation.
- Can be used throughout the product range with additional options for other areas.

## diaLOG APP

- SPINDLE MONITORING
  - Live view of all diaLOG sensor data
  - Analysis of functions by means of individual values
- FINGERPRINT
  - KESSLER fingerprint
  - Detection of the as-found fingerprint (test bench)
  - Comparison in the case of spindle repairs
  - Commissioning fingerprint in the machine tool
  - Cyclical comparison with the new fingerprint
  - Data export
- CONDITION MONITORING
  - Display of captured limit value exceedances
  - Transport monitoring
  - Crash detection
  - Overload detection
  - Display of continuously captured data
  - Load spectra
  - Loading conditions
  - Histogram data
- PRODUCT DATA
  - Display of data on the spindle type plate
  - Display of converter parameters
  - Data export

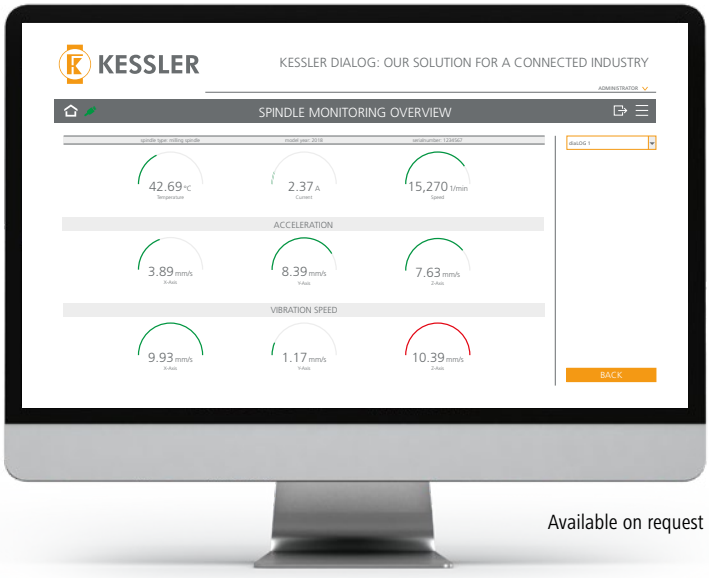


Available on request

All information has been carefully compiled and checked. The printed illustrations are of an explanatory nature and may differ from the actual design. Contents may change without prior notice due to the continuous development of our products. Availabilities and delivery times are subject to variability and have to be confirmed in each individual case. Subject to modification. E&OE.
Photos: Buffalo Machinery Co., Ltd.; © Franz Kessler GmbH, August 2018. Reprinting, even in part, is only permitted with our approval. FK Edition 2018 PK1006-EN-V3.0

KESSLER

# Operating Worldwide for our Customers

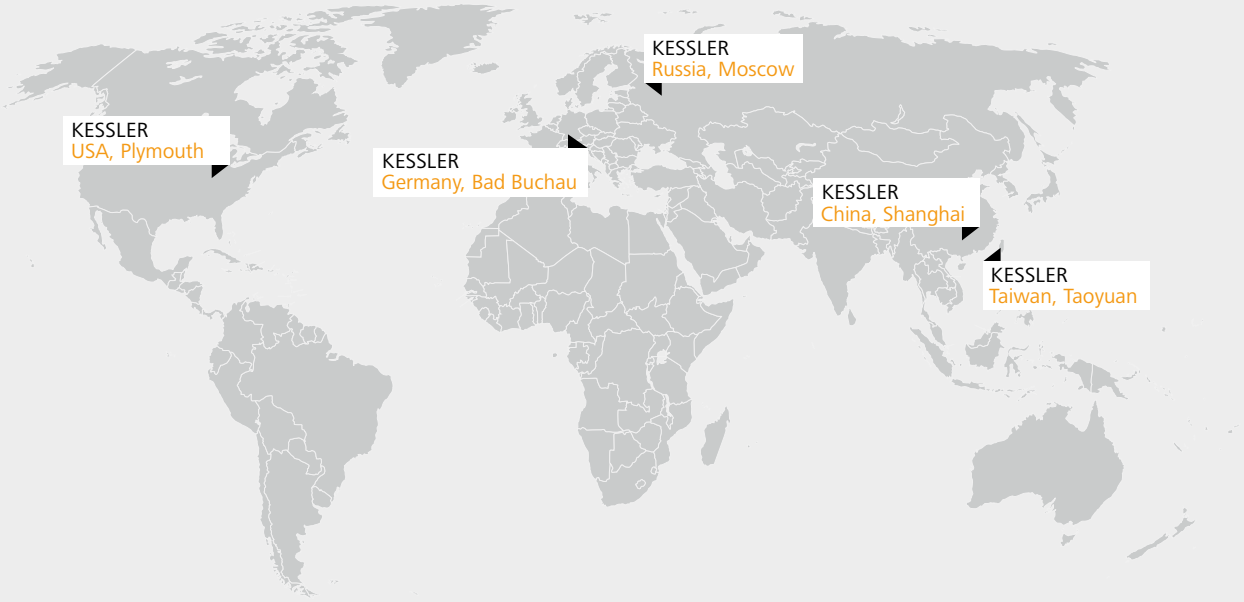


## Germany

**Franz Kessler GmbH**
Franz-Kessler-Straße 2
88422 Bad Buchau, Germany
Tel.: +49 7582 809 - 0
Fax: +49 7582 809 - 170
E-Mail: info@kessler-group.biz

**KESSLER energy GmbH**
Franz-Kessler-Straße 2
88422 Bad Buchau, Germany
Tel.: +49 7582 809 - 0
Fax: +49 7582 809 - 170
E-Mail: info.energy@kessler-group.biz

## USA

**KESSLER USA Inc.**
44099 Plymouth Oaks Blvd.
Plymouth, MI 48170, USA
Tel.: +1 734 404 0152
Fax: +1 734 404 0153
E-Mail: info.usa@kessler-group.biz

## Taiwan

**KESSLER Taiwan Co., Ltd.**
2F, No.315, Sec 1
Minsheng N. Rd
Guishan Township
Taoyuan County 333
Taiwan (R.O.C.)
Tel.: +88 63 326 2256
Fax: +88 63 355 5014
E-Mail: info.tw@kessler-group.biz

## China

**KESSLER (Shanghai)**
**Spindle Service Co., Ltd.**
Building #12
No.318 Yuanshan Rd
Minhang District
201108 Shanghai, China
Tel.: +86 21 6489 7034
Fax: +86 21 6489 7134
E-Mail: info.cn@kessler-group.biz

## Russia

**KESSLER East Ltd.**
Dorogobuzhskaja str., 14, bld. 6
121354, Moscow, Russia
Tel.: +7 495 204 2450
E-Mail: info.ru@kessler-group.biz

SPINDLE TECHNOLOGY I SYSTEM TECHNOLOGY I DRIVE TECHNOLOGY I SERVICE SOLUTIONS

www.kessler-group.biz